DENSE SPRAY COOLED DC-DC CONVERTER

Tahir Cader, Ph.D., Isothermal Systems Research (ISR), Ben Tolman, (ISR), CAI Kabrell, (ISR), Derek Olsen, Opus LLC
Isothermal Systems Research
2218 N. Molter Rd.
Liberty Lake, WA 99019
Phone: (509) 241-4505
Fax: (509) 444-1082
Email: tcader@spraycool.com

ABSTRACT

Advances in system packaging are driving densities to unprecedented levels. The increasing densities are creating significant thermal management challenges. In addition, the military is operating under conditions that are pushing operating temperatures to much higher levels. This combination of events is pushing the military to adopt more aggressive liquid-cooling technologies. The authors have demonstrated a dense DC-DC power converter for use with a fully functional 380W "CompactPCI" dual Opteron server blade, housed in a fully functional 20-slot chassis. All electronics within the chassis were cooled using SprayCool technology. A comparable air-cooled Tracewell TTX400 converter is 2x the footprint and 4x the volume, and delivers approximately 75% of the power in a 40°C ambient. At the system level, the air-cooled solution requires 2x the number of slots for a comparable 8 kW payload. The SprayCool converter was tested under conditions simulating a 45°C ambient, and all key components on the converter were maintained well under the manufacturers' specifications. The converter, blade, and chassis were also subjected to a 196 hour robustness test, during which the converter exhibited no problems. Future work will extend ambient conditions to 60°C and beyond. These and other findings will be discussed in detail in the paper.

INTRODUCTION

System densification and weight reduction are two areas of critical importance in the military today. With the military now operating in significantly harsher climates (e.g. the Middle East), the necessity for systems to operate in ambient temperatures of 70°C and above is becoming more of a reality (45°C water for the Navy). System densification, coupled with a rise in environmental operating temperature is putting a severe strain on the ability to cool the systems with air. In addition, the prevalence of dust (or salt fog for the Navy) is creating an even greater need for environmentally isolated electronics. This combination of events is creating a greater opportunity for alternative cooling solutions such as liquid cooling. The challenge for systems vendors is to now incorporate alternative cooling solutions within an infrastructure that has been built to accommodate air-cooling.

Military systems are typically built to conform to one or more standards. The two major competing standards in the military/aerospace market include CompactPCI and VME. CompactPCI is part of the PCI Industrial Computer Manufacturers Group (PICMG), while VME is part of the VMEbus International Trade Association (VITA).

CompactPCI is the newest specification for PCI-based industrial computers, and is electrically a superset of desktop PCI with a different form factor, i.e., 3U (100 mm x 160 mm) and 6U (160 mm x 233 mm). This specification is intended as an industrial bus for applications requiring high speed computing. The specification has good adoption in the military and aerospace markets, but also in other markets that include telecommunications, industrial automation, instrumentation, etc. Additional information can be found at www.picmg.org.

VME is the more widely adopted specification in the military/aerospace market. Specific military applications include battlefield command and control systems, ground and flight radar control systems, tank and gun controls, and communications. Aerospace applications include avionics, fly-by-wire control systems, and in-flight video servers. The umbrella VITA organization is also sponsoring one or more working groups targeted towards liquid-cooling. For example, the VITA48 working group is working on a specification that enables conduction, spray, liquid flow through, and other liquid-cooling system environments. Additional information can be found at www.vita.com.

The present work is part of a product development effort focused on building a dense, environmentally isolated, high performance computing system targeted at military applications. The heart of the system is comprised of a dense dual Opteron server blade built to conform to CompactPCI standards (see also Cader *et al.*, 2005). The roadmap for the chassis that houses multiple blades calls for a maximum cooling capability of 700 W per slot, but the current blade maximum power dissipation is 390 W. The blade power is supplied by an on-board DC-DC converter that is built on a mezzanine card. The mezzanine card fits on the blade, and allows the blade to fit in a single CompactPCI slot (0.8 inch pitch). This paper focuses on the dense power supply module, and how it compares to product offerings from other power supply vendors.

A larger number of vendors provide power supply level solutions, blade level solutions, and full system level solutions for CompactPCI, VME, or both. Key power supply solutions providers include Tracewell, Kontron, North Atlantic Industries, Elma Electronics, AITech, and Advanced Conversion Products. More specifically, a vendor such as Advanced Conversion Products provides (through subsidiary Transistor Devices Inc.) liquid-cooled power supplies that range from 100 W to greater than 100 kW. In the VME-based area of interest, TDI provides 3U or 6U 100 W conduction-cooled power supplies that accept 28 VDC or 270 VDC input, and that output 3.3 VDC and 5 VDC (see also www.tdipower.com). Key blade and full solutions providers include SBS Technologies, Radstone, Mercury Computer Systems, Curtiss-Wright, Carlo-Gavazzi Mupac, and Performance Technologies Inc.

The primary liquid-based cooling solutions being deployed today include conduction cooling, liquid flow-through cooling, indirect evaporative spray cooling, and direct evaporative spray cooling. Conduction cooling has been deployed for more than a decade. As mentioned above, liquid flow through cooling is being sponsored by VITA (through the VITA48 working group), and has a strong commitment from Mercury in partnership with Parker Hannifin (provider of dry spray cooling solutions (see Parker Hannifin, 2004)) and Tracewell (power supplies). The thermal specification for the liquid flow through, or dry spray cooled, blades targets a minimum of 400W per blade. In conjunction with VITA48, VITA46.0 specifies, per slot, either 576 W at 48 V, 288 W at 12 V, and an additional 12 W at 5 V. Since there is no provision for lower voltages on the backplane, it appears that the DC-DC conversion for the processors, memory, etc. is done directly on each blade. A significant criticism of this solution is that it is highly targeted towards the needs of Mercury, and that it is not a true open standard.

Isothermal Systems Research (ISR) is a leading provider of both indirect and direct evaporative spray cooling systems. The dense DC-DC converter, which is the focus of this paper, is directly spray cooled. Another provider of indirect evaporative spray cooling systems is Rini Technologies. Rini is a leading provider of evaporative spray cooling solutions for solid-state laser components (see Rini, 2003). Rini combines evaporative spray cooling and refrigeration with a proprietary nozzle design.

A search of the literature has revealed a number of power supply module vendors that are building hardware for conduction-cooled blades. The work of the VITA organization points to efforts to develop high power blades that deploy on-board DC-DC converters and that can be cooled via liquid flow through cooling or indirect evaporative spray cooling. The present work is the only one dealing directly with direct evaporative spray cooling of a power supply module. The paper will provide a comparison to other vendors' offerings, and will highlight the advantages offered by the densification afforded by the current direct evaporative spray cooling approach.

DENSE DC-DC CONVERTER

The advent of increasingly high power, multi-processing, high performance computer blades is resulting in very complex power delivery systems. This is particularly true for the space-constrained rack mount Compact PCI configurations. Providing all DC-DC power conversion on each blade, and requiring only one DC voltage input per blade, allows relaxing system power delivery requirements substantially and increases overall system density considerably. The on-board power converter described in this paper uses this approach and requires only a single voltage to power a complex server blade. Further details on the design follow.

Design Details

The on-blade power converter is designed to be used as an intermediate bus voltage power source for point-of-load regulators. It provides a total power output of 400W in a footprint of 2.45" (W) x 5.45" (L) x 0.375" (H), where W refers to width, L refers to length, and H refers to vertical height (see **Figures 1 & 2** below for top/bottom views).

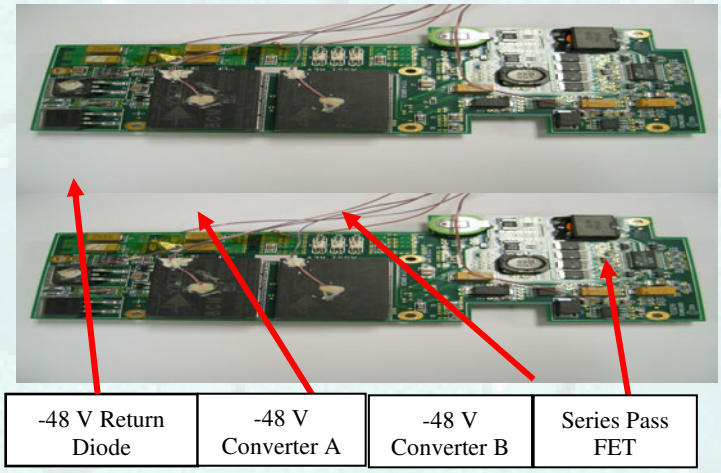

Fig. 1 Photograph of the fully instrumented dense power supply module (top view)

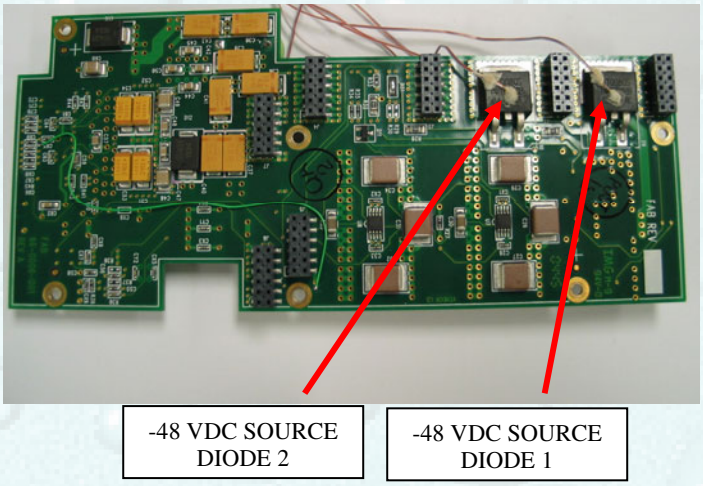

Fig. 2 Photograph of the fully instrumented dense power supply module (bottom view)

The supply outputs the following voltages:

- 12V @ 29 A
- 5.0V @ 4 A
- 3.3V @ 8 A
- 2.5V @ 1 A
- 1.0V @ 1 A
- 3.0V CMOS standby battery

The Vicor parts perform the voltage conversion from -48VDC to 12VDC, while other components perform voltage conversions off of the 12VDC source. The converter also includes a number of on-blade I^2C thermal sensors, and uses opto-isolated control of the -48VDC (allowing the use of a floating supply).

The power supply PCB employs an eight layer design incorporating 2 oz. copper layers. The design of the blade supports hot-swapping or hot-insertion into a powered backplane, thus avoiding any system down-time for other devices installed in the backplane. Control and feedback from the -48VDC monitoring circuitry is opto-isolated, meaning that the -48VDC supply need not be referenced to any other device in the system (fully isolated). The design supports full sequencing of all on-board power systems independently of each other. It is, however, designed to be controlled by an embedded processor capable of intelligent control and monitoring. The 12 volt power sources are approximately 95% efficient, resulting in 20W of the total 400W to be dissipated as waste heat. Dissipation of the 20W in the given small package size presents a challenge, particularly under varying load and problematic environmental conditions. Efficiency losses in all of the other regulators under all load conditions result in device power dissipations that also have to be dealt with.

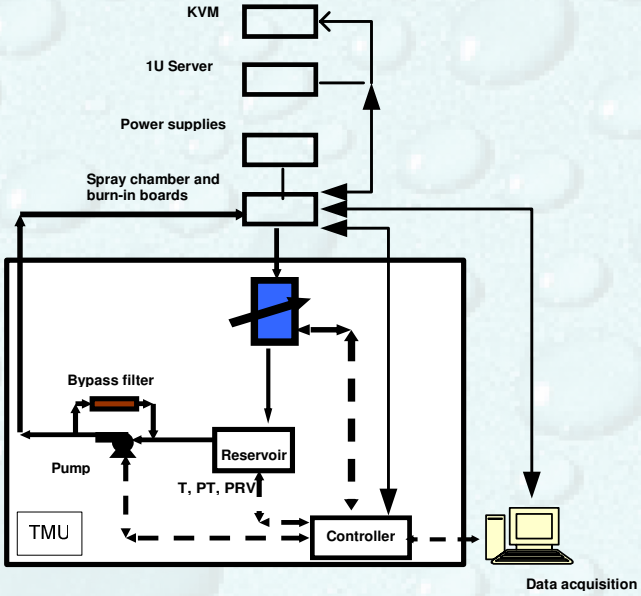

Fig. 3 Schematic diagram of the hardware setup.

The -48VDC input is also redundant, meaning two isolated -48VDC input sources may be utilized. Each input is isolated from the other, and should one fail, the other can assume the full load of the system. In addition, the main -48VDC bus is controlled and isolated by a high power series FET. This FET is designed to allow isolation as well as current ramping when the -48VDC input is enabled.

Since the original design was conceived, advances in Vicor power conversion technology have created new drop-in power converter modules that boost the output power of this design to 600W (Vicor B048K120T30). This output power level is easily achieved by a simple substitution of power converter modules (no circuit board changes are required). By using the newer technology, the 12 volt output current of this design would increase to 46 amps. The densification advances of the power module described herein will increase further with the inclusion of the upgraded technology (although cooling verification still needs to be done).

SPRAYCOOL HARDWARE SETUP

A schematic of the hardware setup is shown in **Figure 3**. The main subsystems consist of a thermal management unit (key elements are shown in **Figure 3**), the global chassis (shown in **Figure 4**), the dense servers (not shown), and the dense power supply modules (top view shown in **Figure 1**, bottom view shown in **Figure 2**).

The thermal management unit (TMU) primarily consists of the pumps (two for redundancy), a reservoir, a heat exchanger, a chemical filter, temperature sensors, pressure transducers, a coolant level sensor, and a controller. The TMU receives the two-phase mixture originating at the global chassis, condenses the vapor, and subcools the coolant, then delivers the coolant back to the servers housed in the global chassis. The chemical filter operates in bypass mode, and continuously filters out any chemical contaminants that may be present. The temperature sensors and pressure transducers are used by the controller to control the pumps, and data from these sensors/transducers is also used to keep the system in a safe operating envelope. The coolant level sensor is also monitored by the controller, and this data is used to alert the user if a leak has developed in the system.

Figure 4 shows the chassis that houses the electronics to be cooled. When placed in this chassis, all the blades are entirely cooled with the dielectric coolant. This chassis is referred to as a "global chassis", referring to the full/global cooling of the blade. The electronics, for the current setup, consist of ISR's dense dual Opteron server blades and a single Tracewell TTX400 power supply module (data is presented from a single blade only). The ISR dense servers are built to loosely conform to the CompactPCI standard. The form factor is met, but the power standard is violated, i.e., the blades are designed for up to 700W, whereas CompactPCI allows up to approximately 70W per blade maximum. The servers used for this work featured 2.0 GHz, 89W Opterons. The blade also houses the dense -48VDC DC-DC converter as a mezzanine card. Design details for the DC-DC converter are provided in

the *Dense DC-DC Converter* section. This converter (or power supply module) is used to provide power to a standard CompactPCI 8-port Ethernet switch board. The coolant is delivered from the sides of the card cage, which covers the majority of the blade. Higher heat flux devices, such as the CPUs, are cooled with dedicated evaporative spray cooling hardware mounted directly above. Additional detail is provided in Cader *et al.* (2005).

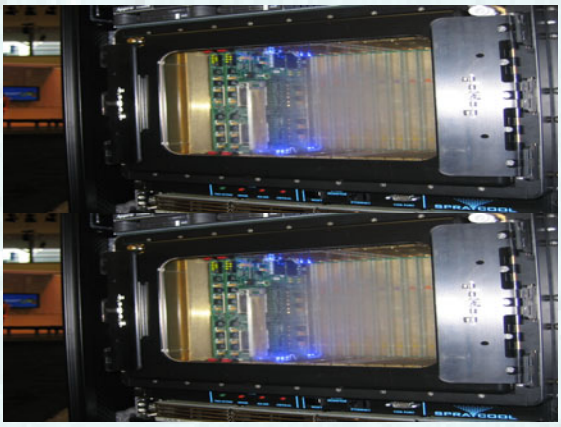

Fig. 4 Global chassis that housed the server blade

The coolant employed was 3M FC-72. FC-72 is a dielectric with the following approximate properties given at 1 atm and room temperature: boiling point of 56°C, specific heat of 1,213J/kg-K, viscosity of 6.15E-4 kg/m-s, thermal conductivity of 0.069W/m-K, and a latent heat of vaporization of 123.7 kJ/kg.

TEST METHODOLOGY

Tests were conducted to thermally stress the blade while gauging the performance of the cooling solution. By fully stressing the blade server, the power supply module was in turn fully stressed. The thermal tests included primary investigations of the effect of coolant supply temperature, coolant supply flow rate, and system pressure (to drive the coolant's boiling point). The data presented in this paper is for an approximate atomizing pressure of approximately 20 psid. 20 psid delivered ~96 ml/min of coolant to power supply. Data is presented for the coolant supply temperature ranging from 28° 35°, 40°, 45° and 50°C. Testing was conducted for the two cases of the system fully gassed, as well as fully degassed. If a system is fully gassed, this means that no special precautions were taken to remove excess air from the system. The primary data presented in this work is for the system fully gassed, which reflects a likely field operating procedure for a large number of applications. The system pressure was also allowed to vary, which also closely reflects the most likely field operating scenario.

In addition to elevating the coolant temperature, the servers were thermally stressed by fully exercising them with publicly available software routines. The software used was CPU burn and nBench. Eight instances of CPU burn were run in order to fully exercise the CPUs, while nBench was run simultaneously in order to benchmark the throughput of the CPUs.

To execute a given test, the cooling system was turned on and allowed to stabilize (indicated by messaging from the system's controller). Upon adequate coolant delivery to the blades, the blades were powered on and the software tests started. The system was then allowed to run until the required coolant temperature was reached. Once the desired coolant temperature was reached, and the electronics achieved steady-state, the data collection was started. A Keithley data acquisition system was used to collect temperature readings from all of the thermocouples used in the system, including on the power supply module at a sample rate of approximately 3 samples/s. The server throughput was displayed on, and recorded by a separate laptop. The controller measured and recorded data from additional sensors used in the system. Upon completion of a given test, the necessary parameters were changed and the basic procedure repeated. Further information on the SprayCool hardware setup can be found in the paper Cader *et al.*, 2005

RESULTS AND DISCUSSION

The manner in which the tests were conducted is described in the *Test Methodology* section. Detailed results are presented and discussed in this section.

Thermal Performance

Table 1 highlights the major heat dissipating components on the power supply module, along with their associated maximum power dissipation levels and temperature limits. For reference, these heat dissipating components are shown in **Figures 1** and **2**. These components have been instrumented with type T thermocouples, and their temperatures monitored in real-time throughout the testing. Data was captured using a Keithley 2700 data acquisition, at a rate of 3 sec/sample.

Table 1. Specifications for key DC-DC converter components

Description	Max Power (W)	Heat Flux (W/cm^2)	Max Component Temperature (°C)
-48 Volt Converter A	9.00	1.16	110
-48 Volt Converter B	9.00	1.16	110
-48 Volt Source Diode 1	4.35	1.93	165
-48 Volt Return Diode	4.35	1.93	90
-48 Volt Source Diode 2	4.35	1.93	165
Series Pass FET	0.35	2.47	160

Figure 5 illustrates the steady-state and time-dependent temperatures for the six highest power dissipating components shown in **Figures 1** and **2**. The data presented is for a coolant supply temperature of approximately 50°C, with the system

pressure at 20.9 psia, the system fully gassed, and at an atomizing pressure of 20 psid. At a system pressure of 20.9 psia, the coolant's boiling point is approximately 69°C, which means that the coolant is delivered to the electronics roughly 19°C subcooled. The CPUs and memory that were powered by the DC-DC converter were exercised using eight instances of CPU Burn with nBench running simultaneously (see the *Test Methodology* section for further explanation). The software settings were designed to fully exercise the CPUs and memory, and to stress the power supply module to the extent possible. The thermal test conditions were selected to mimic the system running in an external ambient temperature of 40 – 45°C. In other words, a relatively efficient heat exchanger would have to be used in order to reject the heat to a 45°C ambient and deliver 50°C coolant.

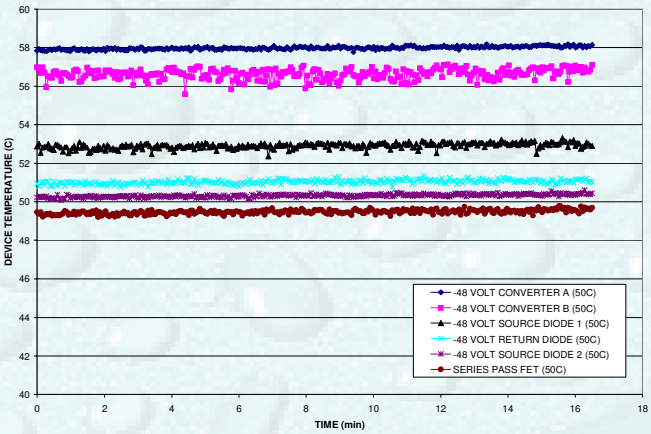

Fig. 5 Time-dependent (steady-state) power supply module component temperatures (coolant temperature of 50°C).

The -48VDC Converter A was measured at 58°C, while the Converter B was measured at approximately 57°C (the converters are wired in parallel, with the two doing the same amount of work). All other components were measured at lower temperatures. The series pass FET was measured at approximately 49°C, which is lower than the temperature at which the coolant is delivered. The coolant temperature is measured in the system reservoir, which is some distance away from where the coolant is delivered to the electronics. It is likely that the coolant has lost some heat by the time it reaches the power supply module, meaning that it is delivered slightly below the stated 50°C. The low heat fluxes of the power supply module components also means that the primary mode of cooling of these components is sensible (i.e., very little phase change). This also provides some explanation as to why these component temperatures are close to that of the coolant delivered.

Figure 6 also illustrates time-dependent results for the power supply module, but for the system degassed to the extent possible. Only the curves for the -48VDC converters are shown. In this case, the coolant's boiling point is 58°C (system pressure was at 15.1 psia), so that the coolant is delivered to the electronics 8°C subcooled. There is very little difference between the converter results shown in this figure and those in **Figure 5**. This result tends to confirm that the dominant cooling mode for the power supply module is sensible. It is typical, for truly high heat flux devices, to see significant benefit from removing the non-condensible gasses from a system and running it degassed. Horacek *et al.* (2003) confirm that the presence of non-condensibles raises the coolant's saturation temperature (i.e., boiling point), which drives component temperatures up.

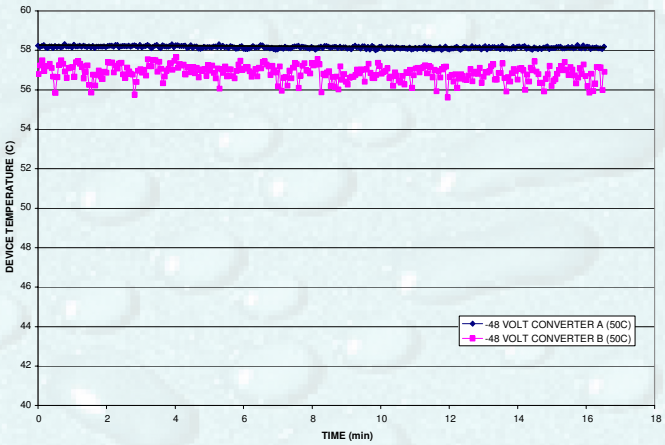

Fig. 6 Time-dependent (steady-state) power supply module component temperatures (coolant temperature of 50°C).

Figure 7 shows the time-dependent results for 28°C coolant delivered to the power supply module, and with the system fully gassed. For this case, the coolant's boiling point was approximately 55°C (system pressure of 13.6 psia), so that the coolant was 27°C subcooled. The higher level of subcooling resulted in a greater temperature deviation between the component temperatures and coolant, as compared to the results with lower levels of subcooling (see the results for **Figures 5** and **6**). Horacek *et al.* (2003) also show that at a given surface heat flux, the surface superheat increases with (thermal) subcooling. This equates with an increased deviation between component and coolant temperatures. Other studies that found similar behavior are also cited in Horacek *et al.* (2003).

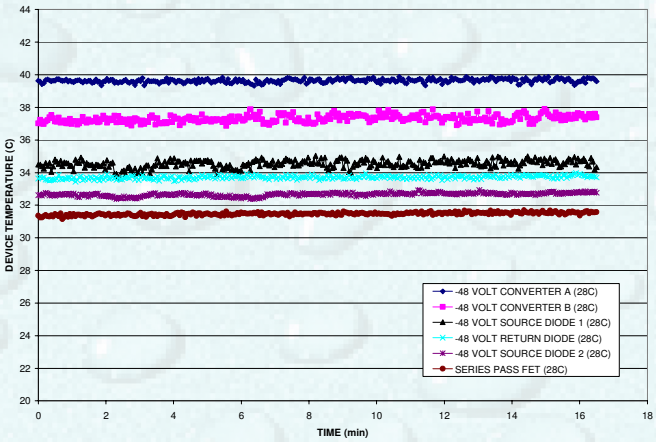

Fig. 7 Time-dependent (steady-state) power supply module component temperatures (coolant temperature of 28°C).

Figure 8 presents the time-averaged results for coolant temperatures of 28°, 35°, 40°, 45°, and 50°C. The system pressures corresponding to the afore-mentioned coolant temperatures were 13.6, 15.0, 16.3, 17.7, and 20.9 psia. The system was gassed for all conditions. The increase in component temperature is shown to be linear for all components, over the entire temperature range. This provides additional confirmation that the primary cooling mode is sensible (a distinct change of slope is evident upon a transitioning from sensible to latent).

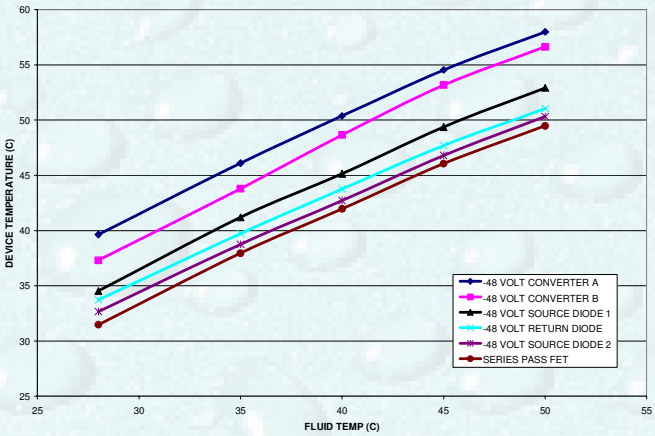

Fig. 8 Averaged power supply module component temperatures.

Table 1 shows the temperature specifications for all the power supply module components. The results presented in **Figures 5 – 8** show that the system was able to maintain all component temperatures well within the manufacturers' temperature specifications. Future work with this system will focus on showing the survivability of the complete system in external ambient temperatures of 60°C or even higher.

Military Robustness Testing

The power supply module was subjected to military robustness testing along with the remainder of the system. The system was subjected to thermal, power, vibration, humidity, and altitude stresses over a 168 hour period (see **Figure 9** for the specific profile). During the robustness testing, the software MemTest86 v3.2 was run. Memtest86 executes a series of numbered tests to check for memory execution errors. These tests consisted of a combination of test algorithm, data pattern, and cache settings. The order of these tests was arranged so that errors could be detected as rapidly as possible. The purpose of this testing was to stress the blade and check for memory execution errors that could be induced by the applied environmental stresses (i.e., thermal, vibration, etc.). Any malfunctions by the DC-DC converter would be picked up by the results from the test routine.

The system functioned per design in all areas of interest. More specifically, no errors were recorded during the execution of MemTest86. This in turn translated to zero problems with the power supply module through the duration of the robustness testing. Per the test results, it was concluded that the power supply module met all the requirements of the military robustness testing.

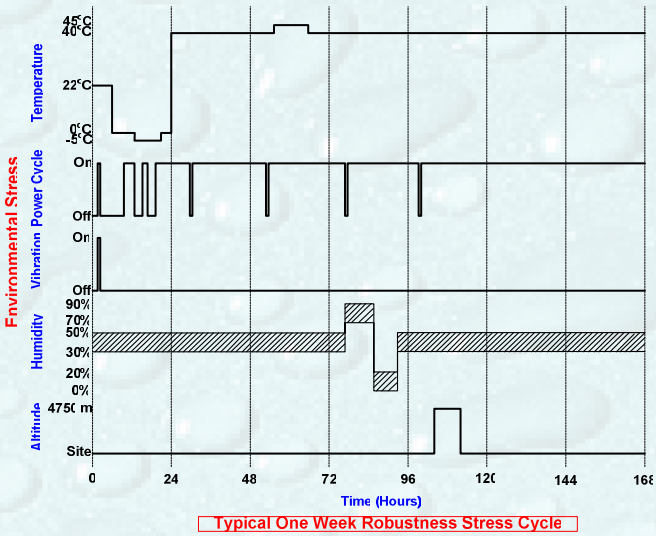

Fig. 9 Robustness stress cycle diagram.

Densification Advances

The *SprayCool Hardware Setup* section describes the hardware tested for this study. In particular, the blade server is described, along with the onboard DC-DC converter. An individual DC-DC converter provides 400 W of total power output for a single high power dual Opteron server. The total solution consisting of the supply and server blade conforms to the CompactPCI form factor in both footprint and pitch (0.8 inch pitch), but is in violation of the maximum power of approximately 70W allowed by CompactPCI.

Competitive CompactPCI blade server solution offerings are provided by Kontron, Momentum (now a part of Mercury), and Themis. The CP6010 from Kontron is a two slot solution at 110W, the Cheetah CRX2 from Momentum is a single slot solution at 60W, and the TA64 from Themis is a single slot solution at 60W. All of these blades feed off a power supply that powers multiple blades, and that resides in a dedicated chassis slot. An example of such a power supply offering is the TTX400 from Tracewell. The TTX400 measures 3.931 in W x 6.676 in L x 0.78 in H (see **Figure 10**). At a footprint of approximately 26.2 in^2, a TTX400 is 2x the area of the ISR dense power supply module. At a volume of 20.4in^3, the TTX400 is 4x the volume of the ISR power supply.

The current evaporative spray cooling solution enables an 8 kW chassis with 20 slots populated with high power dual Opteron server blades. It would take one TTX400 in a dedicated slot to power a single 400W blade, or a total of 20 TTX400 power supplies to power 8 kW worth of the high power blades. The air-cooled approach would result in a 40 slot solution for an 8kW chassis. It should also be noted that the TTX400 is subject to power derating at elevated temperatures. For example, at a 40°C ambient, the TTX400 is derated 100W relative to its peak of 400 W at 0°C (see **Figure**

11). This would mean that the current TTX400 could not power a 400W board in a 40°C ambient. While the power output of the dense DC-DC converter was not explicitly measured, the thermal results suggest that it will not be necessary to derate the power output with an increase in coolant temperature.

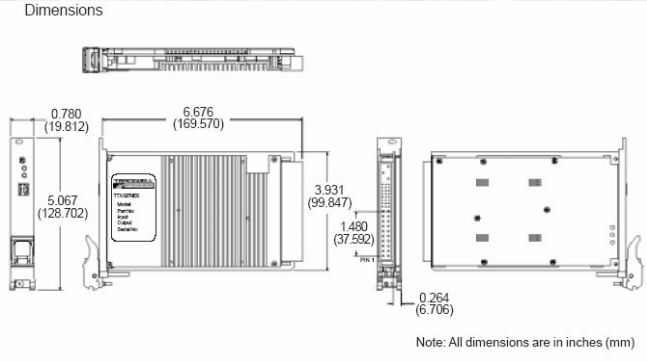

Fig. 10 Schematic of the Tracewell TTX400 power supply module (source: Tracewell TTX400-3U-1S-48 data sheet)

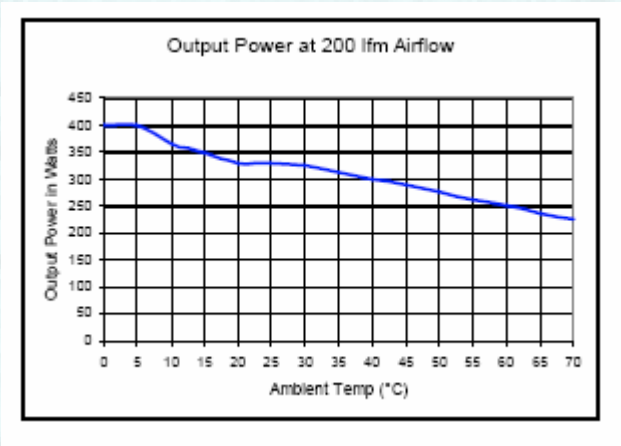

Fig. 11 Power derating curve for the Tracewell TTX400 (source: Tracewell TTX400-3U-1S-48 data sheet)

The VITA48 compliant solution has the potential to get close to the density offered by the current solution. Similarly to the solution described in this paper, VITA48 calls for power conversion to occur on the blade. For pure liquid flow-through cooling, VITA48 makes allowances for up to 200W per blade For more efficient cooling such as evaporative spray cooling, VITA48 makes allowances for as much as 600W per blade. To date, and to the knowledge of the authors, VITA48 has not demonstrated the ability to cool a fully functional board even at the lower power level of 200W. As discussed in this paper, the current solution has demonstrated a live dual Opteron blade designed for a maximum power of 380W when fully loaded with memory. At present memory loading, the board dissipates 200W. Cader *et al.* (2005) show the ability to efficiently cool the dense memory. Cooling of the 380W board should be readily achievable.

CONCLUDING REMARKS

The authors have demonstrated a dense evaporative spray cooled, DC-DC power converter for use with an evaporative spray cooled, 380W "CompactPCI" dual Opteron server blade. The converter delivers approximately 400W at 12V and 5V, and is built on a daughter card that plugs into the blade. The converter and blade fit into a single slot (0.8 inch pitch) in a sealed 20 slot chassis. The evaporative spray cooled converter has been compared to a comparable air-cooled converter from Tracewell (TTX400).

Under the worst-case thermo-fluid conditions investigated, the evaporative spray cooled converter was sprayed with 50°C coolant, while the chassis pressure was maintained at 21 psia (fully gassed conditions). The Vicor bricks did not exceed 59°C, the FET temperature was 50.1°C, and none of the dual diodes exceeded 54°C. All of these temperatures were well within the manufacturers' specifications.

The densification advances of the evaporative spray cooled converter were analyzed. The TTX400 is approximately 2x the footprint, 4x the volume, and delivers roughly 75% of the power in a 40°C ambient. The current evaporative spray cooled solution enables an 8 kW chassis with 20 slots populated with high power dual Opteron server blades. It would take one TTX400 in a dedicated slot to power a single 400W blade, resulting in a 40 slot solution for 8 kW. VITA48 has the potential to provide a solution at a density equivalent to that of the evaporative spray cooled solution, but to the authors' knowledge, has not yet demonstrated a fully functional board or chassis.

The robustness testing conducted on the evaporative spray cooled solution has shown that the system can survive and function under robustness conditions. The proposed evaporative spray cooled solution provides an attractive option for rugged military platforms that have a need for a high density and high performance general purpose computing solution.

REFERENCES

1. Cader, T., and Tilton, D. E., 2004, "Implementing Spray Cooling Thermal Management in High Heat Flux Applications", Itherm 2004 Panel on *Cooling Technologies for High Heat Flux Applications*, Las Vegas (NV).
2. Cader, T., Tolman, B., Kabrell, C., and Krishnan, S., 2005, "SprayCool Thermal Management for Dense Stacked Memory", Proceedings of IMECE, Orlando (FL).
3. Horacek, B., Kim, J., and Kiger, K., 2003, "Effects of Noncondensable Gas and Subcooling on the Spray Cooling of an Isothermal Surface", Proceedings of ASME IMECE 2003, Washington (DC).
4. Parker Hannifin, 2004, "Advanced Cooling Systems", CoolCon 2004, www.vita.com/cool/alcws.html.
5. Rini, D., 2003, "Evaporative Spray Cooling for High Power Solid State Lasers", www.mdatechnology.net/techsearch.asp?articleid=628.